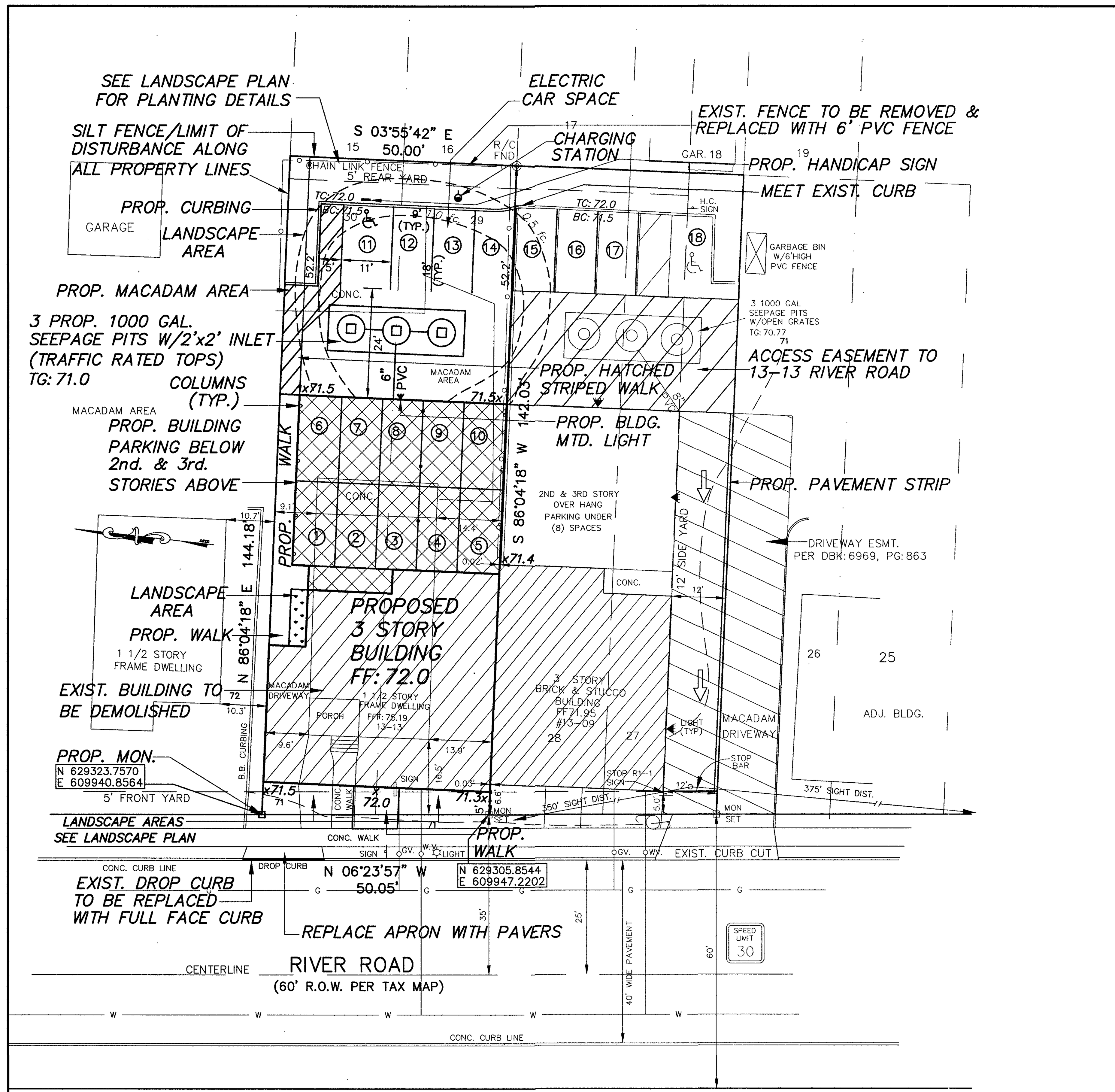


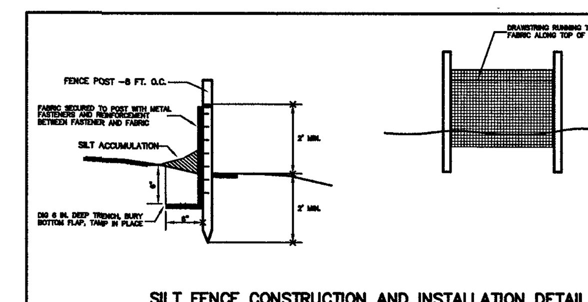


SILT FENCE CONSTRUCTION AND INSTALLATION DETAIL
N.T.S.

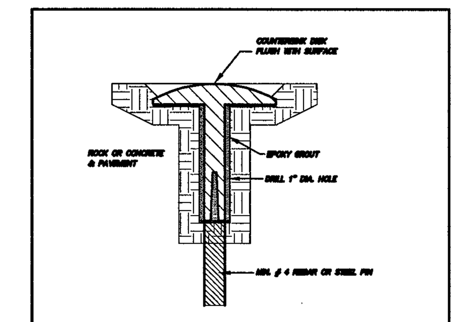


TYPE C MONUMENT
DISK IN ROCK OR PRECAST CONCRETE & PAVEMENT
N.T.S.

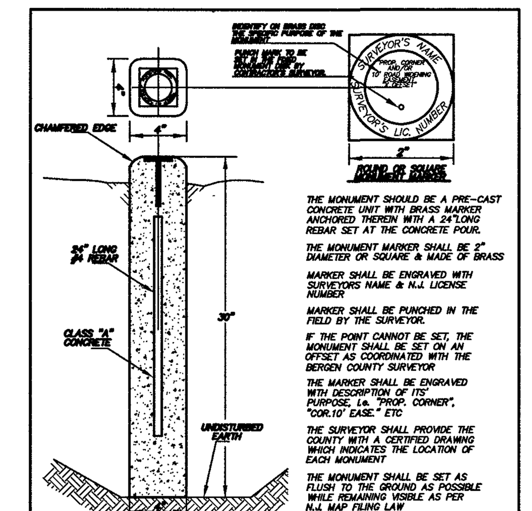


BERGEN COUNTY SITE PLAN AND SUBDIVISION MONUMENT INSTALLATION DETAILS.
N.T.S.

HANDICAP PARKING SIGN DETAIL
(N.T.S.)

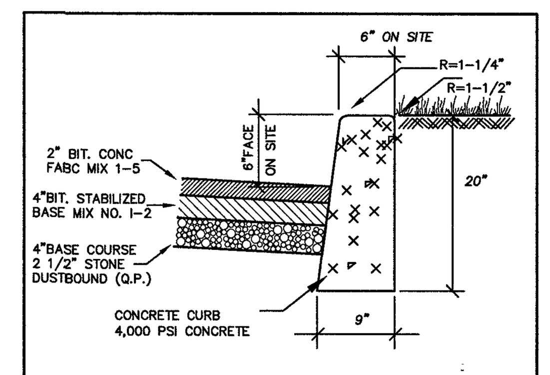


CONCRETE CURB DETAIL
N.T.S.

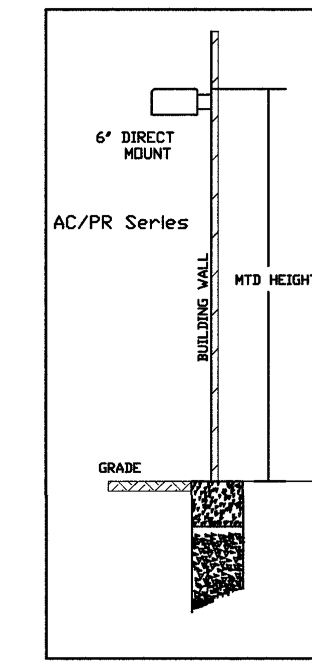


## PROPERTY OWNERS WITHIN 200 FT OF P.Q.

BOROUGH OF FAIR LAWN, BERGEN COUNTY, NEW JERSEY

| | PROPERTY OWNERS NAME | PROPERTY LOCATION |
|---|---|---|
| **BLOCK 5608** | | |
| LOT 23 | BRUNETTI, V. 13-01 GEORGE ST. FAIR LAWN, NJ | 13-01 GEORGE ST. |
| LOT 25 | LA RUE, H & V. 13-05 GEORGE ST. FAIR LAWN, NJ | 13-05 GEORGE ST. |
| LOT 27 | TYMINSKI, J & H. 13-11 GEORGE ST. FAIR LAWN, NJ | 13-11 GEORGE ST. |
| LOT 30 | KASYJANSKI, J & G. 13-15 GEORGE ST. FAIR LAWN, NJ | 13-15 GEORGE ST. |
| LOT 33 | WILLIAMSON, P & M. 13-25 GEORGE ST. FAIR LAWN, NJ | 13-25 GEORGE ST. |
| **BLOCK 5610** | | |
| LOT 7 | NAGI, P & P. 13-30 GEORGE ST. FAIR LAWN, NJ | 13-30 GEORGE ST. |
| LOT 9 | MELKUMOV, E & V. 13-26 GEORGE ST. FAIR LAWN, NJ | 13-26 GEORGE ST. |
| LOT 11 | VAN NESS, R & S. 13-22 GEORGE ST. FAIR LAWN, NJ | 13-22 GEORGE ST. |
| LOT 13 | HERNANDEZ, J & M. 13-18 GEORGE ST. FAIR LAWN, NJ | 13-18 GEORGE ST. |
| LOT 15 | ANASTASOPOULOS, P. 13-14 GEORGE ST. FAIR LAWN, NJ | 13-14 GEORGE ST. |
| LOT 17 | MESSERE, A & J. 13-10 GEORGE ST. FAIR LAWN, NJ | 13-10 GEORGE ST. |
| LOT 19 | WALD, J. 13-06 GEORGE ST. FAIR LAWN, NJ | 13-06 GEORGE ST. |
| LOT 21 | LANDI, J. 7-11 HOPPER AVE. FAIR LAWN, NJ | 7-11 HOPPER AVE. |
| LOT 23.01 | 13-05 RIVER ROAD LLC 13-05 RIVER ROAD FAIR LAWN, NJ | 13-05 RIVER ROAD |
| LOT 29 | KURNATH, L. 13-13 RIVER ROAD FAIR LAWN, NJ | 13-13 RIVER ROAD |
| LOT 31 | RIVERALL, LLC 13-17 RIVER ROAD FAIR LAWN, NJ | 13-17 RIVER ROAD |
| LOT 33 | RIVER HOUSE CONDOMINIUMS LLC 12-56 RIVER ROAD FAIR LAWN, NJ | 13-23 RIVER ROAD |
| **BLOCK 5611** | | |
| LOT 1 | IGNACIO, D & E. 7-20 HOPPER AVE. FAIR LAWN, NJ | 7-20 HOPPER AVE. |
| LOT 78 | COMMUNITY BK OF BERGEN CTY, NJ 125 W. PLEASANT AVE. MAYWOOD, NJ | 12-79 RIVER ROAD |
| **BLOCK 5612** | | |
| LOT 8 | SAMOILIS, D & M 7-07 CAMP COURT FAIR LAWN, NJ | 13-30 RIVER ROAD |
| LOT 11 | NBL, ASSOC. LLC 13-20-24 RIVER ROAD FAIR LAWN, NJ | 13-20-24 RIVER ROAD |
| LOT 14.01 | LENAPE HOLDINGS LLC 192 RT. 22 WEST GREEN BROOK, NJ | 13-14 RIVER ROAD |
| LOT 23 | WEISSMAN, K & C & G. 13-01 6TH ST. FAIR LAWN, NJ | 13-01 6TH ST. |
| LOT 25 | FREDERICK, CONSTRUCTION INC 15 HURST TERRACE WAYNE, NJ | 13-07A 6TH ST. |
| LOT 28 | MOURIN, SHIRLEY 13-13 6TH ST. FAIR LAWN, NJ | 13-13 6TH ST. |
| LOT 30 | MARROQUIN, G. 13-19 6TH ST. FAIR LAWN, NJ | 13-19 6TH ST. |
| LOT 33 | NBL, ASSOC. LLC 13-21 6TH ST. FAIR LAWN, NJ | 13-21 6TH ST. |
| **BLOCK 5613** | | |
| LOT 1 | 1270 REALTY LLC P.O. BOX 1055 FAIR LAWN, NJ | 12-70 RIVER ROAD |

### LOCAL & COUNTY AGENCIES

| | | |
|---|---|---|
| BOROUGH OF FAIR LAWN 8-01 FAIR LAWN AVENUE FAIR LAWN, NJ 07410 ATTN: BOROUGH CLERK | VERIZON VICE PRESIDENT 540 BROAD AVENUE NEWARK, NJ 07101 | PSE&G MANAGER-CORPORATE PROPERTIES 80 PARK PLAZA, T6B NEWARK, NJ 07102 |
| BOROUGH OF FAIR LAWN 8-01 FAIR LAWN AVENUE FAIR LAWN, NJ 07410 ATTN: D.P.W. | CABLEVISION 5 LEGION DR. CRESSKILL, NJ 07626 | N.J. D.O.T. 1035 PARKWAY AVENUE TRENTON, NJ 08625 |
| BOROUGH OF FAIR LAWN 8-01 FAIR LAWN AVENUE FAIR LAWN, NJ 07410 ATTN: SEWER DEPARTMENT | UNITED WATER OF NEW JERSEY 200 OLD HOOK ROAD HARRINGTON PARK, NJ 07630 | N.J. DEPARTMENT OF ENVIRONMENTAL PROTECTION CN-402 TRENTON, NJ 08625-0402 |
| BOROUGH OF FAIR LAWN 8-01 FAIR LAWN AVENUE FAIR LAWN, NJ 07410 ATTN: WATER DEPARTMENT | BERGEN COUNTY PLANNING BOARD ONE BERGEN COUNTY PLAZA HACKENSACK, NJ 07601 | BERGEN COUNTY PLANNING BOARD ONE BERGEN COUNTY PLAZA HACKENSACK, NJ 07601 |

| Luminaire Schedule | | | | | | |
|---|---|---|---|---|---|---|
| Project: All Projects | | | | | | |
| Symbol | Qty | Label | Arrangement | Lumens | LLF | Description |
| ◄ | 3 | ac | SINGLE | 33100 | 0.650 | LED (400w mh) |

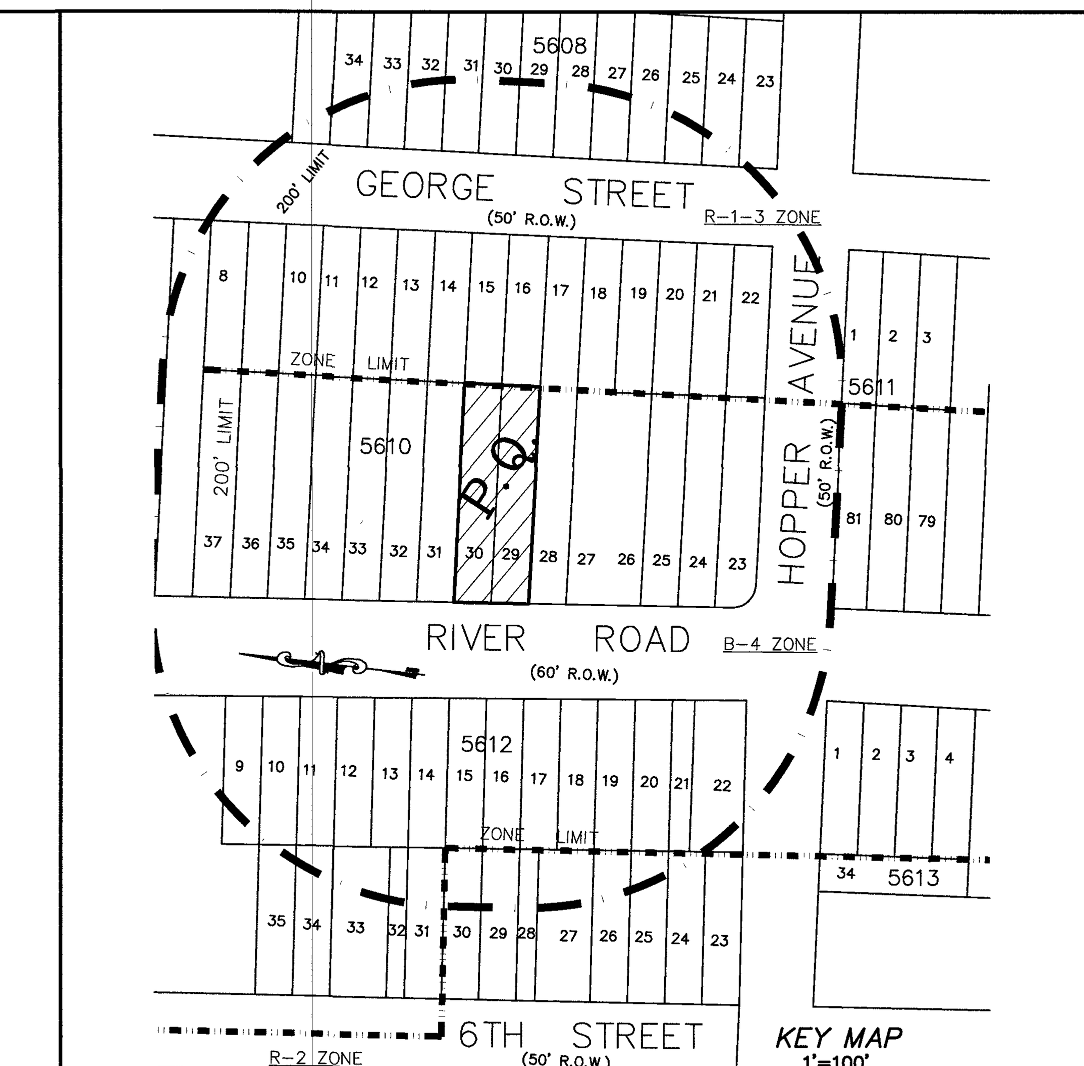


KEY MAP
1"=100'

## NOTES

1. CONTOURS SHOWN HEREON ARE IN NGVD, 1929 DATUM
2. TOTAL LOT AREA = 7,155 SF., .16 AC.
3. REFERENCE MAPS:
   SURVEY OF PROPERTY FOR 13-09 RIVER ROAD, LLC, PREPARED BY CANGER ENGINEERING ASSOCIATES, DATED 12/4/2013.
   DK:3424 PG:540, DK:6689 PG:357, DK:7707 PG:091
4. DEED RESTRICTIONS: NONE
5. UTILITIES TO BE PLACED UNDERGROUND.
6. PARKING CALCULATIONS.
   - RETAIL: 1000 SF.x/ 200 = 5 SPACES
   - STORAGE AREA: 326 SF.= 1 SPACES
   - 6-3BR APARTMENTS @ 2 SP/APT= 12 SPACES
   PARKING REQUIRED: 18 SPACES
   10% REDUCTION FOR EV SPACE
   TOTAL PARKING REQUIRED: 16.2 SPACES
   TOTAL PARKING PROVIDED: 15 SPACES - VARIANCE REQUESTED
   (x DOES NOT INCLUDE ELEVATOR, TRASH AREA OR STAIRCASE AREAS)
7. PROPERTY LOCATED IN THE B-4 RIVER ROAD BUSINESS DISTRICT.
8. SIGHT TRIANGLE REQUIREMENTS: NOTHING SHALL BE ERECTED , PLACED PLANTED, OR ALLOWED TO GROW IN SUCH A MANNER AS TO OBSTRUCT VISION BETWEEN A OF HEIGHT 2.5' ABOVE THE CENTER-LINE OF THE STREET OR DRIVEWAY.
9. ALL DRAINAGE PIPES SHALL BE 8" SCH. 40 PVC.
10. NO TREES ARE PROPOSED FOR REMOVAL.
11. APPLICANT SHALL PARTICIPATE IN ANY COOPERATIVE PARKING PLAN WHICH IS RELEVANT AND APPROPRIATE FOR THE PROPERTY.
12. SOLID WASTE SHALL BE STORED IN SEPARATE ROOM WITHIN THE BUILDING.
13. EXISTING IMPERVIOUS AREA IS 4,663SF., PROPOSED IMPERVIOUS AREA IS 6,175 SF. TOTAL NET IMPERVIOUS AREA IS 6,175 SF.
14. POSTED SPEED LIMIT ALONG RIVER ROAD IS 30 MPH.
15. COUNTY SIGHT DISTANCE CRITERIA- THE DRIVER'S POSITION SHALL BE FIFTEEN (15) FEET BEHIND THE CURB LINE. THE DRIVER'S EYE LEVEL SHOULD BE SET AT A POINT THREE AND HALF (3.5) FEET ABOVE THE DRIVEWAY PAVEMENT AND THE DRIVER SHOULD BE CAPABLE OF SEEING AN OBJECT TWO (2) FEET HIGHT PLACED IN THE CENTER OF ALL LANES. DEPICTED SIGHT DISTANCES REFLECT MAXIMUM CLEAR SIGHT DISTANCE.
16. STATE PLANE COORDINATES (NAD-1983) HAVE BEEN OBTAINED BY MEANS OF GLOBAL POSITIONING SYSTEM (G.P.S.).
17. THE CONTRACTOR SHALL NOTIFY THE BERGEN COUNTY DEPARTMENT OF PUBLIC WORKS INSPECTOR AT 336-6815 PRIOR TO BEGINNING CONSTRUCTION AND WHEN CONSTRUCTION IS COMPLETE.
18. ALL TRAFFIC CONTROL SIGNS MUST CONFORM IN FACE DESIGN AND CONSTRUCTION TO SPECIFICATIONS FOUND IN THE MANUAL ON UNIFORM TRAFFIC CONTROL DEVICES, U.S. D.O.T., FEDERAL HIGHWAY ADMINISTRATION. SPECIFICALLY, REGULATORY & WARNING SIGN SHALL BE FABRICATED OF FLAT ALUMINUM SHEETS AND SHALL BE COVERED WITH ASTM D4956 TYPE X1 SUPER HIGH EFFICIENCY FULL CUBE RETRO-REFLECTIVE SHEETING.
19. ALL EXISTING OR PROPOSED SIDEWALKS, CURBING AND HANDICAP RAMPS SHALL BE CONSTRUCTED AND/OR RECONSTRUCTED TO MEET THE CURRENT REQUIREMENTS OF THE ADA (ACCESS-BOARD.GOV/PROWAC/DRAFT.HTM). PURSUANT TO N.J.S.A.27:17-8, THE COUNTY OF BERGEN MAINTAINS ROADWAYS BETWEEN CURB LINES OR EDGES OF PAVEMENT. THE COUNTY NEVER THE LESS RETAINS ITS JURISDICTIONAL AUTHORITY TO ENFORCE THE ADA REQUIREMENTS.
20. ALL MATERIALS AND CONSTRUCTION PERFORMED IN ANY OF THE COUNTY OF BERGEN'S RIGHT-OF-WAY/ROAD WIDENING EASEMENT SHALL BE IN ACCORDANCE WITH CURRENTLY ADOPTED NEW JERSEY DEPARTMENT OF TRANSPORTATION STANDARD SPECIFICATIONS FOR ROAD AND BRIDGE CONSTRUCTION (2007 EDITION OF NEWER) AS MODIFIED BY ANY SUPPLEMENTAL SPECIFICATIONS AND AMENDMENTS BY THE NJ DOT AND COUTY OF BERGEN SPECIFICATIONS. THIS WORK INCLUDES BUT, ITS NOT LIMITED TO THE FOLLOWING: MONUMENTS, REFERENCE MARKERS, CURBS, SIDEWALKS, GUIDE RAIL & END TREATMENTS, FENCES, RETAINING WALLS, STORM DRAINAGE PIPES, STORM DRAINAGE STRUCTURE, BRIDGES & CULVERTS AND ROADWAY CONSTRUCTION. OMISSION AND/OR CORRECTIONS DEEMED NECESSARY TO CONFORM TO ANY SPECIFICATIONS AND DETAILS SHALL BE RESPONSIBILITY OF THE PROJECT'S APPLICANT, DEVELOPER, CONTRACTOR AND/OR PROPERTY OWNER.
21. CURB AND ROADWAY SPECIFICATIONS ARE TO BE IN ACCORDANCE WITH BERGEN COUNTY ENGINEER'S "DESIGN AND THE COUNTY ENGINEER'S OFFICE (201-336-6800).
22. LANDSCAPING: SEE LANDSCAPE PLAN PREPARED BY MEUMANN ASSOCIATES.
23. PVC FENCING TO BE INSTALLED WILL MATCH THE ADJACENT AT 13-09 RIVER ROAD.

## COVERAGE BREAKDOWN

| | |
|---|---|
| BUILDING: | 3,938 SF. |
| BUILDING COVERAGE: | 3,938 SF. = 55.0% * |
| MACADAM AREA: | 2,112 SF. |
| WALKS: | 319 SF. |
| IMP. COVERAGE: | 6,369 SF. = 89.0% |

* VARIANCE REQUIRED

## ZONING DATA (B-4 RIVER ROAD BUSINESS DISTRICT)

| ITEM | REQUIRED | PROPOSED |
|---|---|---|
| MIN. FRONT YARD: | 5.0 FT. | 5.0 FT. |
| MIN. SIDE YARD: | 0' OR 12' | 0 FT./0 FT. ** |
| MIN. REAR YARD: | 49.5 FT. | 52.2 FT. |
| MAX. BUILDING HEIGHT: | 33 FT. | 33 FT. |
| MAX. BLDG. COVERAGE: | 40% | 55.0% * |
| MAX. IMP. COVERAGE: | 90% | 89.0% |

* VARIANCE REQUIRED
** 12' WHERE DRIVEWAY PROVIDED, 0' OTHERWISE, BUT NO MORE THAN 1 SIDE IS 0'.

### VARIANCES REQUESTED

- BUILDING COVERAGE: 55.6% PROPOSED vs 40% ALLOWED
- PARKING UNDER BUILDING vs NONE ALLOWED
- NO LOADING SPACE vs 1 REQUIRED
- 2nd & 3rd STORY FOOTPRINTS EXCEEDING GROUND LEVEL FOOTPRINT BY 34.83' vs 2' ALLOWED
- NO REAR OR SIDE YARD BUFFERS

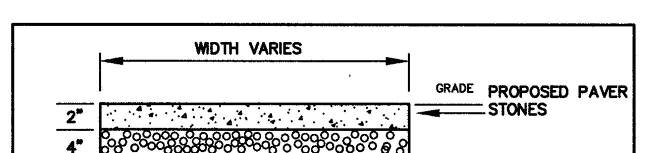


WALK DETAIL
(NTS)

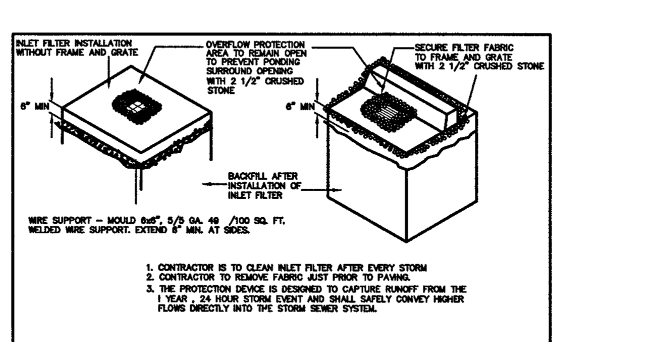


INLET FILTER DETAIL
(NTS)

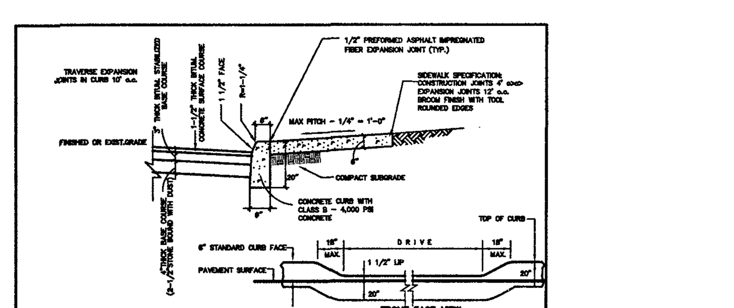


DEPRESSED CURB DETAIL
N.T.S.

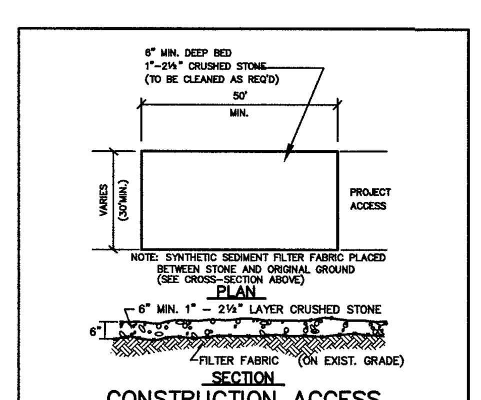


CONSTRUCTION ACCESS
(N.T.S.)

BERGEN COUNTY SOIL CONSERVATION DISTRICT
SOIL EROSION AND SEDIMENT CONTROL NOTES

1. All soil erosion and sediment control practices will be installed in accordance with the Standards for Soil Erosion and Sediment Control in New Jersey (NJ Standards), and will be installed in proper sequence and maintained until permanent stabilization is established.
2. Any disturbed area that will be left exposed for more than thirty (30) days and not subject to construction traffic shall immediately receive a temporary seeding and mulching. If the season prohibits temporary seeding, the disturbed area will be mulched with unrotted straw at a rate of 2 tons per acre anchored by approved methods (i.e. peg and twine, mulch netting, or liquid mulch binder).
3. Immediately following initial disturbance or rough grading, all critical areas subject to erosion will receive a temporary seeding in combination with straw mulch or a suitable equivalent, at a rate of 2 tons per acre, according to the NJ Standards.
4. Stabilization Specifications:
A. Temporary Seeding and Mulching:
*Ground Limestone* - Applied uniformly according to soil test recommendations.
*Fertilizer* - Apply 11lbs. /1,000 sf of 10-20-10 or equivalent with 50% water insoluble nitrogen (unless a soil test indicates otherwise) worked into the soil a minimum of 4".
*Seed* - perennial ryegrass 100 lbs. /acre (2.3 lbs. /1,000 sf) or other approved seed; plant between March 1 and May 15 or between August 15 and October 1.
*Mulch* - Unrotted straw or hay at a rate of 70 to 90 lbs. /1,000 sf applied to achieve 95% soil surface coverage. Mulch shall be anchored by approved methods (i.e. peg and twine, mulch netting, or liquid mulch binder).
B. Permanent Seeding and Mulching:
***Topsoil* – A uniform application to an average depth of 5", minimum of 4" firmed in place is required.**
*Ground Limestone* - Applied uniformly according to soil test recommendations.
*Fertilizer* - Apply 11 lbs. /1,000 sf of 10-10-10 or equivalent with 50% water insoluble nitrogen (unless a soil test indicates otherwise) worked into the soil a minimum of 4".
*Seed* - Turf type tall fescue (blend of 3 cultivars) 350 lbs. /acre (8 lbs. /1,000 sf) or other approved seed; plant between March 1 and October 1 (summer seeding requires irrigation)
*Mulch* - Unrotted straw or hay at a rate of 70 to 90 lbs. /1,000 sf applied to achieve 95% soil surface coverage. Mulch shall be anchored by approved methods (i.e. peg and twine, mulch netting, or liquid mulch binder).
5. The site shall at all times be graded and maintained such that all stormwater runoff is diverted to soil erosion and sediment control facilities.
6. Soil erosion and sediment control measures will be inspected and maintained on a regular basis, including after every storm event.
7. Stockpiles are not to be located within 50' of a floodplain, slope, roadway or drainage facility. The base of all stockpiles shall be contained by a haybale sediment barrier or silt fence.
8. A crushed stone, vehicle wheel-cleaning blanket will be installed wherever a construction access road intersects any paved roadway. Said blanket will be composed of 1" - 2½" crushed stone, 6" thick, will be at least 30' x 100' and should be underlain with a suitable synthetic sediment filter fabric and maintained.
9. Maximum side slopes of all exposed surfaces shall not exceed 3:1 unless otherwise approved by the District.
10. Driveways must be stabilized with 1" - 2½" crushed stone or subbase prior to individual lot construction.
11. All soil washed, dropped, spilled or tracked outside the limit of disturbance or onto public right-of-ways, will be removed immediately. Paved roadways must be kept clean at all times.
12. Catch basin inlets will be protected with an inlet filter designed in accordance with Section 28 -1 of the NJ Standards.
13. Storm drainage outlets will be stabilized, as required, before the discharge points become operational.
14. Dewatering operations must discharge directly into a sediment control bag or other approved filter in accordance with Section 14-1 of the NJ Standards.
15. Dust shall be controlled via the application of water, calcium chloride or other approved method in accordance with Section 16-1 of the NJ Standards.
16. Trees to remain after construction are to be protected with a suitable fence installed at the drip line or beyond in accordance with Section 9-1 of the NJ Standards.
17. The project owner shall be responsible for any erosion or sedimentation that may occur below stormwater outfalls or off-site as a result of construction of the project.
18. Any revision to the certified Soil Erosion and Sediment Control Plan must be submitted to the District for review and approval prior to implementation in the field.
19. A copy of the certified Soil Erosion and Sediment Control Plan must be available at the project site throughout construction.
20. The Bergen County Soil Conservation District must be notified, in writing, at least 48 hours prior to any land disturbance: Bergen County SCD, 700 Kinderkamack Road, Suite 106, Oradell, NJ 07649. Tel: 201-261-4407; Fax 201-261-7573.
21. The Bergen County Soil Conservation District may request additional measures to minimize on or off-site erosion problems during construction.
22. The owner must obtain a District issued report of compliance prior to the issuance of any certificate of occupancy. The District requires at least one week's notice to facilitate the scheduling of all report of compliance inspections. All site work must be completed, including temporary/permanent stabilization of all exposed areas, prior to the issuance of a report of compliance by the District.

**Revised 12/7/17**

23. TOPSOIL STOCKPILE PROTECTION
   A. APPLY GROUND LIMESTONE AT A RATE OF 90 lbs. PER 1000 S.F.
   B. APPLY FERTILIZER (10-20-10) AT A RATE OF 11 lbs. PER 1000 S.F.
   C. APPLY PERENNIAL RYEGRASS SEED AT A RATE OF 1 lb. PER 1000 S.F. AND ANNUAL RYEGRASS AT A RATE OF 1 lb. PER 1000 S.F.
   D. MULCH STOCKPILE WITH STRAW OR HAY AT A RATE OF 90 lbs. PER 1000 S.F.
   E. APPLY LIQUID MULCH BINDER OR TACK TO STRAW OR HAY MULCH.
   F. PROPERLY ENTRENCH A SILT FENCE AT THE BOTTOM OF THE STOCKPILE.
24. TEMPORARY VEGETATIVE STABILIZATION STANDARDS
   A. APPLY GROUND LIMESTONE AT A RATE OF 90 lbs. PER 1000 S.F.
   B. APPLY FERTILIZER (10-20-10) AT A RATE OF 11 lbs. PER 1000 S.F.
   C. APPLY PERENNIAL RYEGRASS SEED AT A RATE OF 1 lb. PER 1000 S.F. AND ANNUAL RYEGRASS AT A RATE OF 1 lb. PER 1000 S.F.
   D. MULCH VEGETATION WITH STRAW OR HAY AT A RATE OF 90 lbs. PER 1000 S.F.
   E. APPLY LIQUID MULCH BINDER OR TACK TO STRAW OR HAY MULCH.
25. PERMANENT VEGETATIVE STABILIZATION STANDARDS
   A. APPLY TOPSOIL TO A DEPTH OF FIVE (5) INCHES (UNSETTLED).
   B. APPLY GROUND LIMESTONE AT A RATE OF 90 lbs. PER 1000 S.F. AND WORK FOUR (4) INCHES INTO SOIL.
   C. APPLY FERTILIZER (10-20-10) AT A RATE OF 11 lbs. PER 1000 S.F.
   D. APPLY HARD FESCUE SEED AT A RATE OF 2.7 lbs. PER 1000 S.F., CREEPING RED FESCUE SEED AT A RATE OF 0.7 lbs. PER 1000 S.F. AND PERENNIAL RYEGRASS SEED AT A RATE OF 0.25 lbs. PER 1000 S.F.
   E. MULCH VEGETATION WITH STRAW OR HAY AT A RATE OF 90 lbs. PER 1000 S.F.
   F. APPLY LIQUID MULCH BINDER OR TACK TO STRAW OR HAY MULCH.

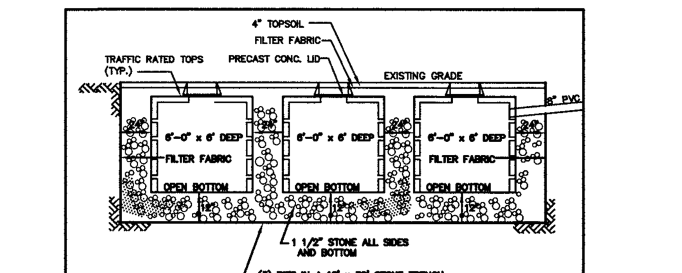


SEEPAGE PIT DETAIL
(NTS)

## CONSTRUCTION SEQUENCE

1. INSTALL STABILIZED CONSTRUCTION ACCESS AND SILT FENCE.
2. STRIP AND STOCKPILE TOPSOIL
3. REMOVE ALL EXIST. STRUCTURES.
4. EXCAVATE FOR BUILDNG, CONSTRUCT NEW BUILDING.
5. EXCAVATE FOR UTILITIES, PARKING AREA.
6. INSTALL ALL UNDERGROUND UTILITIES, DRAINAGE, CURBING.
7. FINISH GRADING AND PLACE PERMANENT SOIL STABILIZATION.
9. REMOVAL OF ALL TEMPORARY SOIL EROSION & SEDIMENT CONTROL MEASURES.

| DRIVEWAY WIDTH VARIES |
|---|
| 2" FABC TOP COURSE |
| 4" STABILIZED BASE |
| 4"QUARRY PROCESS |

PAVEMENT SECTION
(NTS)

## SOIL MOVEMENT CALCULATIONS

EXCAVATION:
-PITS: 10'x30'x10'DEEP/27 = 111 CY.
-FOOTINGS: 166'x2'x3'DEEP/27 = 37 CY.
TOTAL EXCAVATION: 148 CY.
FILL:
-EXIST. FND.: 870 SF.x6'DEEP/27 = 193 CY.

## LEGEND

| | |
|---|---|
| (symbol) | PROP. MONUMENT |
| ◎ | POINTS FOUND |
| LOT 11 | LOT NUMBER |
| (2419.01) | BLOCK NUMBER |

GRAPHIC SCALE
20 0 10 20 40 80
( IN FEET )
1 inch = 20 ft.

APPROVED BY THE
COUNTY PLANNING BOARD
COUNTY OF BERGEN, NEW JERSEY

ATTESTED TO BY: ______ DATE: ______

THIS SITE PLAN WAS APPROVED AT A REGULAR MEETING OF THE ZONING BOARD OF ADJUSTMENT OF THE BOROUGH OF FAIR LAWN, BERGEN COUNTY, NEW JERSEY.

CHAIRMAN: ______
SECRETARY: ______

THIS SITE PLAN WAS APPROVED BY THE BOROUGH ENGINEER AT A REGULAR MEETING OF THE ZONING BOARD OF ADJUSTMENT OF THE BOROUGH OF FAIR LAWN, BERGEN COUNTY, NEW JERSEY.

DATE: ______
ENGINEER: ______

**OWNER/APPLICANT:**
*13-13 RIVER ROAD, LLC.*
*103 JASMINE COURT*
*FRANKLIN LAKES, NJ 07417*

| NO. | DATE | DESCRIPTION | BY |
|---|---|---|---|
| | | | |

# SITE PLAN
## SOIL EROSION AND SEDIMENT CONTROL PLAN

LOTS 29 & 30, BLOCK 5610
CURRENT TAX ASSESSMENT MAP NO. 16
13-13 RIVER ROAD
BOROUGH OF FAIR LAWN, BERGEN COUNTY, NEW JERSEY

| SCALE: | DRAFTED BY: JDL | DATE: | JOB. NO. | SHEET: |
|---|---|---|---|---|
| 1"=20' | CHECKED BY: RW | 10/6/21 | 2021- K\KATEV\SP | 1 OF 1 |

*ROBERT J. WEISSMAN, P.E. & L.S.*
*WEISSMAN ENGINEERING CO., P.C.*
*PROFESSIONAL ENGINEER AND LAND SURVEYOR*
*686 GODWIN AVENUE, MIDLAND PARK, NJ 07432*
*VOICE(201) 445-2799, FAX(201) 445-0483*
*CERTIFICATION OF AUTHORIZATION # 24GA27926800*

N.J. P.E. & L.S. LIC. NO. 29,624